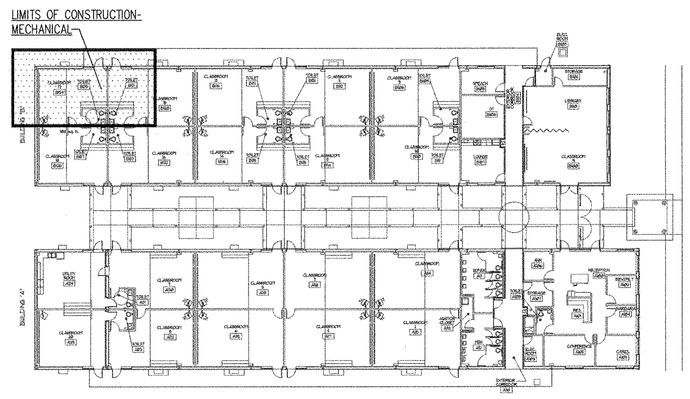

L11 OVERALL / KEY PLAN

NTS

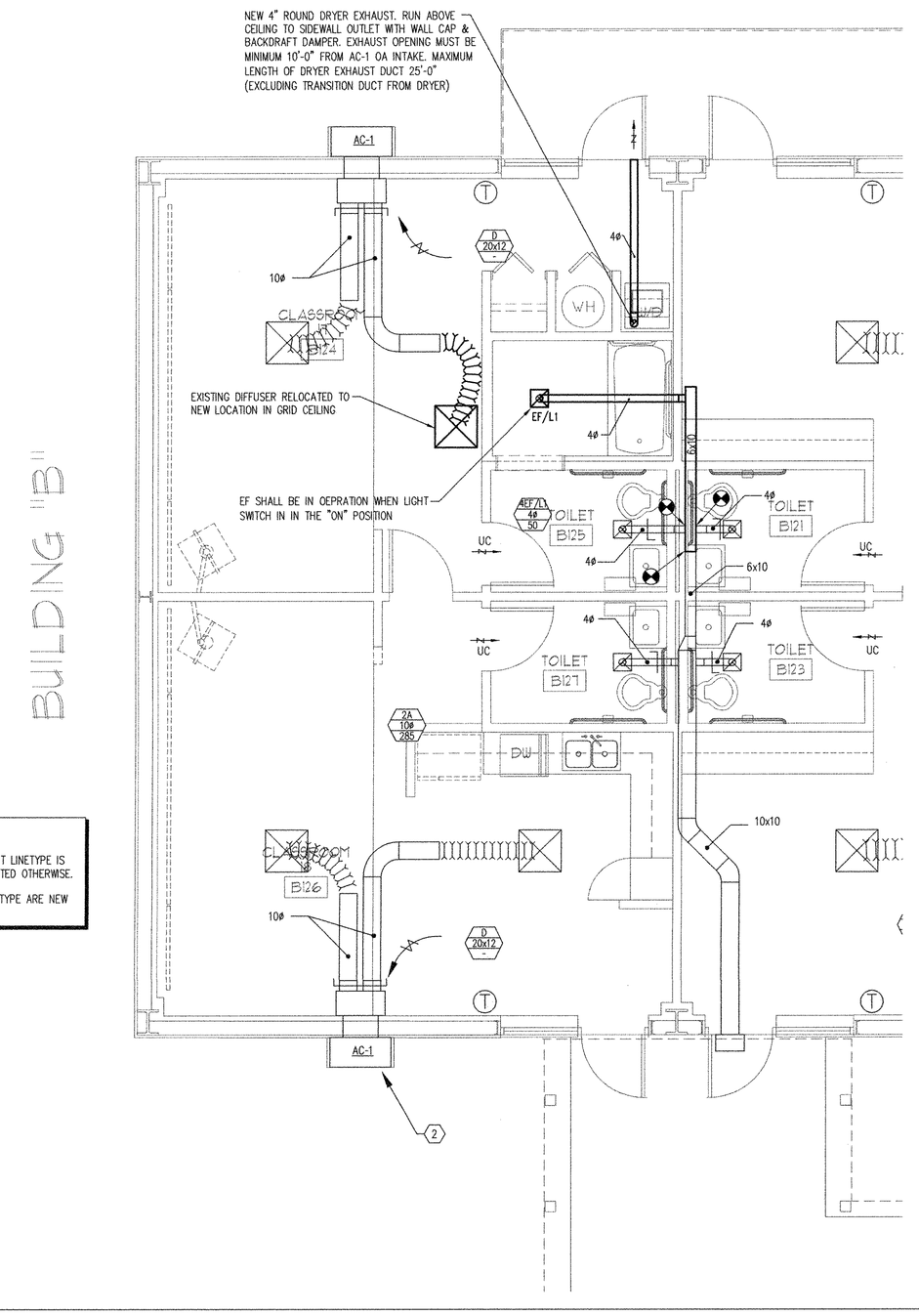

GENERAL NOTES:

1. ALL HVAC WORK SHOWN IN LIGHT LINETYPE IS EXISTING TO REMAIN UNLESS NOTED OTHERWISE.
2. ALL HVAC WORK IN HEAVY LINETYPE ARE NEW OR RELOCATED.

A4 FLOOR PLAN

1/4"=1'-0"

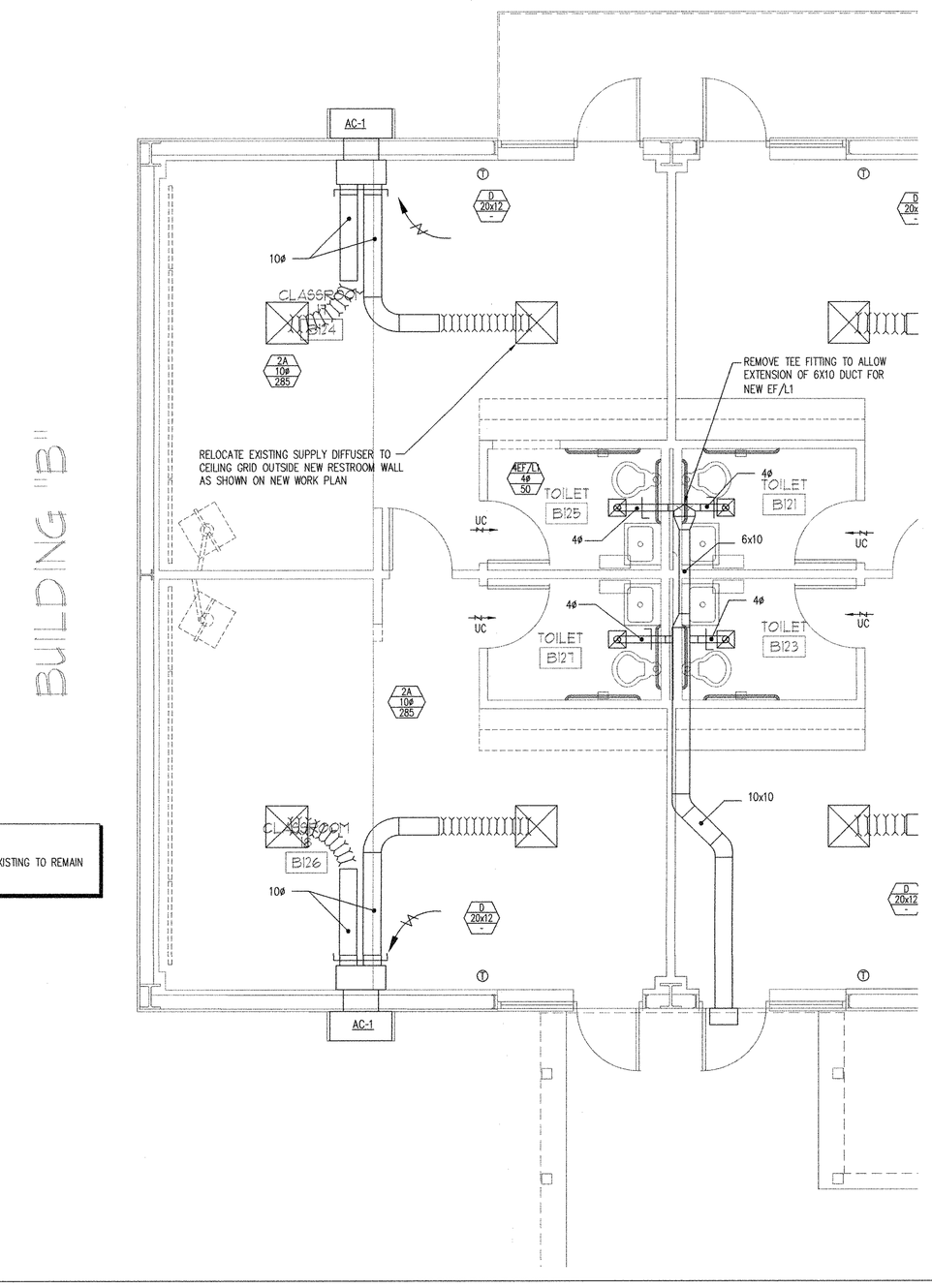

GENERAL NOTES:

1. ALL HVAC WORK SHOWN IS EXISTING TO REMAIN UNLESS NOTED OTHERWISE.

A11 DEMO PLAN

1/4"=1'-0"

TLC ENGINEERING FOR ARCHITECTURE
1717 S. Orange Avenue
Suite 300
Orlando, Florida 32806
Phone: 407-841-9050
Fax: 407-425-7367
www.tlc-engineers.com
© Copyright 2005 TLC Engineering for Architecture, Inc.
EB #0000015 TLC NO: 106047

SEAL

Edward J. Carroll, P.E.
Florida License #62802
Seal

PRINCETON HOUSE CHARTER SCHOOL
ORLANDO, FLORIDA

Hunton Brady ARCHITECTS

DATE	SUBMISSION / REVISION	NO.

MECHANICAL PLAN NEW/DEMO

PROJ. NO. 010110.00 SHEET
DRAWN RNC
M111

Copyright HuntonBrady Architects P.A. All Rights Reserved. 800 N. Magnolia Ave., Suite 600, Orlando, Florida 32803 (407) 839-0886 (407) 839-1709/Fax www.huntonbrady.com License AAC001744

M:\2006-Jobs\106047-Princeton House School 2008\CAD-MEP\Sheets\ M111.dwg 06/13/06 08:52 luke.vordonian-999999999